RoHS Compliant

Drawing For Reference Only

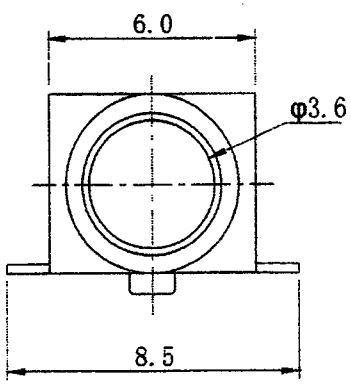

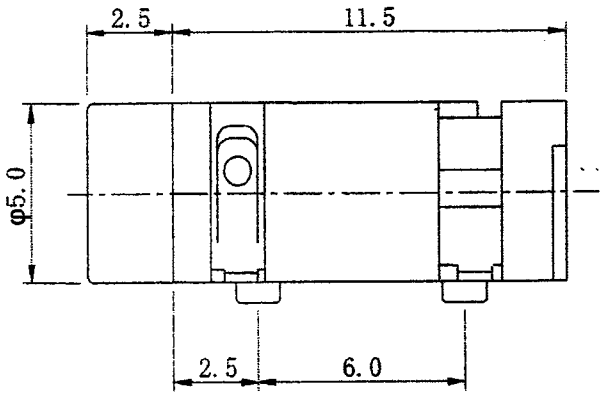

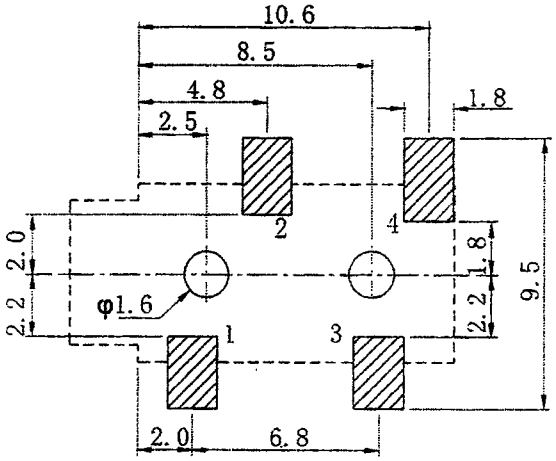

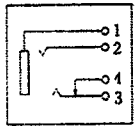

Technical requirement :
1. This product should meet EU RoHS related requirement.
2. The surface of plastic part should be without any crackle such as burr,lack,and so on phenomenon.
3. The surface of metal part should be without any defect such as scaur,nick,oxidation and plating problem.
4. The electronic performance should be the same as spec.
5. The un-specified tolerance is : <6±0.2
6~20±0.3
>20±0.4

額定負荷 Ratings	DC 30V 0.5 A
绝缘電阻 Insulation Resistance	DC 500V 60 Sec. 100 mΩ Min
抗電強度 Dielectric Voltage	AC 500V (50~60Hz) 60 Sec.
操作力 Operating Force (Kgf)	插入力 (Insertion Force) 3~20N 拔出力 (Extraction Force) 3~20N
負荷壽命 Operating Life With Load	5,000 次 Cycles

DCI DRAGON CITY INDUSTRIES LIMITED			Design	K.W Law	Remark		Scale	
			Drawing	W.K Yeung	Remark		Material	
Item Name	3.5 MM PHONE JACK	Tolerance :	Check	K.L Wong	Remark		Drawing No.	A309061415
Item No.	ST-3008-01-TR(SL)	Unit : mm	Approval	K.W Chan	Remark		Sheet	